PRODUCT DATA SHEET

DOUBLE FILAMENT STOP AND TAIL LIGHT LAMP CLEAR P21/5W 12V 21/5W

GE2005-9141 Category:P21/5W Cap: BAY15d

1. Specification

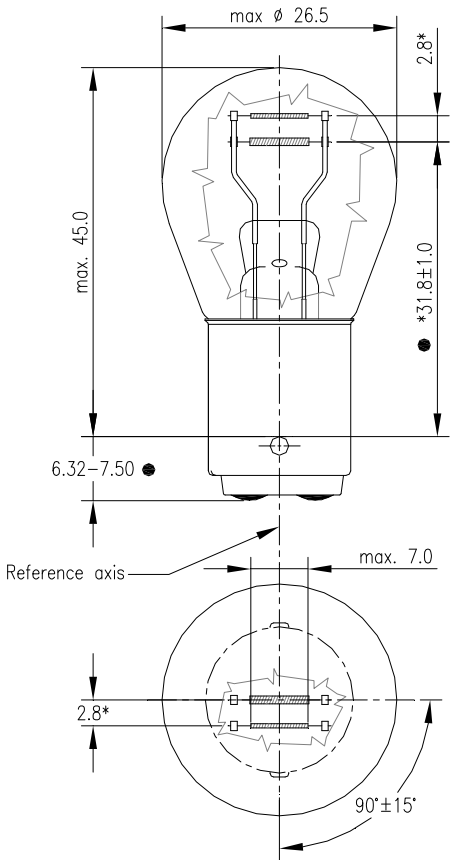

Regulation / Standard

ECE R37/ P21/5W
IEC 60061-1 / 7004-11B-7
IEC 60809 / 3110-2
IEC 60810
Directive 2000/53/EC (ELV directive)

● critical to quality parameter
* To be checked by means of "box system"

Dimensions in mm.

2. Technical Data

Initial Parameters		
Test Voltage:	13.5 V	
Wattage ●:	23.5 W – 26.5 W / 5.4 W – 6.6 W	
Luminous Flux ●:	374 – 506 Lumens / 28 – 42 Lumens	
Life		
Test Voltage:	13.5V	13.5V
Test Cycle:	MAJOR: continuous MINOR: continuous	MAJOR: 15s ON /15 OFF flashing +MINOR: continuous
Life:	B_3=250 Hours, T_C=480 Hours B_3=1000 Hours, T_C=2000 Hours	B_3=490 Hours, T_C=960 Hours
Lumen Maintenance:	80 / 80% at 110 / 750 Hours	80 / 70% at 110 / 750 Hours
Operating Requirements		
Operating Position:	Horizontal	

DOUBLE FILAMENT STOP AND TAIL LIGHT LAMP CLEAR P21/5W 12V 21/5W

GE2005-9141 Category:P21/5W Cap: BAY15d

2. Technical Data continued

Monograming:

GE 1077 F Dt G HUNGARY 12V P21/5W E1 2DY

GE:	Mark
1077 F:	Type
Dt:	Date (Day/Month/Year)
G:	Product Line & Shift Code
Hungary:	Country of Origin
12V:	Nominal Voltage
P21/5W:	Category (Wattage)
E1:	Identification of “E” Mark Approval
2DY:	Approval Code

All other text of monogramming are different as per several specific SKUs.

Stamping text:
GE 1077 F
Dt G
HUNGARY

12V P21/5W
E1 2DY

Place of stamping:
On superficie of cap